General Specifications

GS 12E01A06-01E

Model TB750G Right Angle Scattered Light Turbidimeter

EXAxt TB

■ General

There are increasing demands for good quality water for both industrial-use and drinking water applications because of rapid industrial development and consumer demands for better quality of life. A large amount of the waste water from both applications has been drained or discharged into rivers, causing pollution to worsen year after year. This has caused serious social problems. Therefore, turbidimeters, conventionally used for the operation and control of water purification plants, are nowadays being required to measure the amount of matter suspended in various sorts of industrial waste water and to measure the turbidity of chemical processes.

Since their sales began in 1959, Yokogawa's turbidimeters have been continuously developed and improved using various measurement principles suited for various applications. With its many achievements, Yokogawa has earned its customers' confidence.

Developed based on years of experience and applications in process fields, the TB750G Turbidity Measuring System using right angle light scattering method provides highly reliable measurement and improved maintainability which improve upon what previous models could offer. A wide range of options are available to meet users' various needs.

■ Features

- Highly reliable measurement with excellent linearity and repeatability
  - Linearity: ±2% of reading or ±0.01 NTU, whichever is greater
  - Repeatability: ±1% of reading or ±0.002 NTU, whichever is greater
  - Display resolution: 0.001 NTU
- Easy-to-clean cell
- Compact, lightweight converter and detector
- User configurable measuring range
  - Measuring range: 0-0.2 NTU to 0-100 NTU
- Measuring range switching (2 or 3 ranges)
- Enhanced self-diagnostic function as standard
  - Light source failure, input element failure, calibration failure, various circuit failures, etc.
- Detector structure to remove sudden reading change caused by bubbles
- A wide range of measurement conditions
  - Low flow rate: 0.05 to 20 l/min
  - High pressure: 500 kPa maximum
  - Temperature: 0 to 50°C
- Detector can be connected for in-line analysis
- 2 analog outputs, 3 relay contact outputs, and 1 serial communication
- Many options available
  - Ultrasonic transducer and oscillator for ultrasonic cleaning
  - Various head tanks to accommodate application requirements

■ System Configuration

Example: Typical system

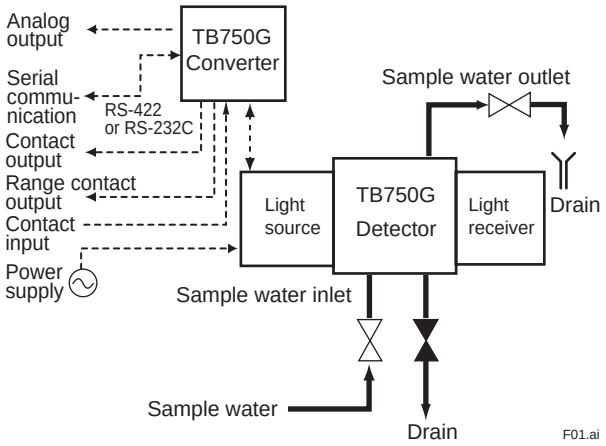

Example: System with ultrasonic oscillator and zero turbidity filter

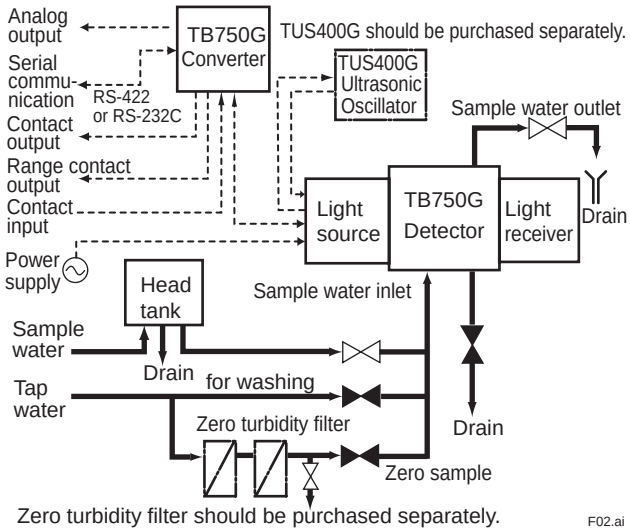

YOKOGAWA

Yokogawa Electric Corporation
2-9-32, Nakacho, Musashino-shi, Tokyo, 180-8750 Japan
Tel.: 81-422-52-5617 Fax.: 81-422-52-6792

GS 12E01A06-01E

4th Edition Mar. 2014

■ Standard Specifications

1. TB750G Right Angle Scattered Light Turbidimeter

Measurement: Turbidity of finished water and water used in general processes
Measurement method: Right angle light scattering method
Measuring range: 0.000 to 100.0 NTU
Display: 4 digit LCD (6 digits in message area), negative value indication enabled/disabled
Unit: NTU
Resolution: 0.001 NTU
Turbidity standard: Formazin
Analog output:
Number of outputs: 2
Output signal:
Analog output 1; 4 to 20 mA DC, isolated
Analog output 2; 4 to 20 mA DC or 0 to 20 mA DC selectable, isolated (Both analog outputs are not isolated.)
Load resistance: 550Ω max.
Output range: Configurable within the measuring range
Minimum range; 0 to 0.2 NTU
Maximum range; 0 to 100 NTU
Minimum span; 20% or more of upper limit of the range or 0.2 NTU, whichever is greater.
Note: When auto range switching is selected, lower limit of the range is 0 NTU.
Range switching:
Enabled/disabled in either analog output 1 or 2. Not available in both outputs.
Manual (local) range/auto range/remote 2-range/remote 3-range switching selectable.
Output signal in maintenance:
Output hold enabled/disabled
Hold output: Last measured value or fixed value (between 2.0 and 22.0 mA for 4 to 20 mA DC output; between 0.0 and 22.0 mA for 0 to 20 mA DC output) selectable
Output signal in FAIL: Output hold enabled/disabled
Hold output: Last measured value or fixed value (between 2.0 and 22.0 mA for 4 to 20 mA DC output; between 0.0 and 22.0 mA for 0 to 20 mA DC output) selectable
Negative value indication: Enabled/disabled
Serial communication:
Number of outputs: 1
Communication signal: RS-422 or RS-232C, isolated
Command: Requests of turbidity measurement, error information, and output range switching
Communication data: Turbidity, status (measurement/maintenance/calibration, FAIL, high/low alarm, output range), error information
Communication method: Start-stop synchronization, non-procedural
Communication setting: 9600 bps, parity (even), stop bit 1 bit, data length 8 bit
Distance: RS-422; 1000 m max.
RS-232C; 10 m max.
Cable: RS-422; Twisted pair cable with shield (AWG 20 to 16)
RS-232C; Cable with shield
Contact output:
Type: Relay contact output
Number of contacts: 3
Action: On/Off
Function:
S1, S2: High/low alarm or in-maintenance selectable
FAIL: Failure
Rating: 250 VAC, 2A, 125 VA max. (resistance load) or 30 VDC, 3A, 60 W max. (resistance load), Form C (NC/NO/COM, 3 terminals)
Contact status:

	Contact S1, S2			Contact FAIL		
Status	LED	NO	NC	LED	NO	NC
In action	ON	Closed	Open	ON	Open	Closed
Not in action	OFF	Open	Closed	OFF	Closed	Open
Power OFF	OFF	Open	Closed	OFF	Open	Closed

Contact input:
Type: Voltage-free contact input
Number of contacts: 2
Function: Remote range switching
On resistance: Input resistance 200Ω or less
Off resistance: input resistance 100kΩ or greater
Contact status:
Remote 2-range switching

Contact	When Range Switching is Selected	
	Range A	Range B
IN1-COM	Open	Closed

Remote 3-range switching

Contact	When Range Switching is Selected		
	Range A	Range B	Range C
IN1-COM	Open	Closed	Open
IN2-COM	Open	Open	Closed

Range contact output:
Type: Relay contact output
Number of contacts: 3
Action: On/Off
Rating: 250 V AC, 2 A, 125 VA max. (resistance load) or 30 V DC, 3 A, 60 W max. (resistance load)
Contact status:

Contact	When Fixed Range is Selected	When Range Switching is Selected		
		Range A	Range B	Range C
RANGE A-COM	Open	Closed	Open	Open
RANGE B-COM	Open	Open	Closed	Open
RANGE C-COM	Open	Open	Open	Closed

Calibration:
Zero calibration: Zero water (filtered water with zero turbidity)
Span calibration: Sensitivity calibration using check block or turbidity standard solutions
2-point calibration: Turbidity standard solutions
Grab sample calibration: Zero point and sensitivity correction using grab sample
Self-diagnostics: Light source failure, input element failure, calibration failure, AD circuit failure, memory failure, etc.
Installation location: Indoor (Weather protection is required for outdoor installation)
Ambient temperature: -5 to 50°C (Sample and tap water may need protection against freezing)
Ambient humidity: 5 to 95%RH (non-condensing)
Storage temperature: -30 to 70°C
Sample water conditions:
Flow rate: 0.05 to 20 l/min
Temperature: 0 to 50°C

Pressure: 500 kPa max.
Mounting: Pipe, wall, rack or panel mounting
Piping connection (detector):
Sample water inlet: Rc1/2 or 1/2NPT (optional)
Sample water outlet: Rc1/2 or 1/2NPT (optional)
Drain port: Rc1 or 1NPT (optional)
Cable inlet port (detector and converter):
DIN Pg 13.5 cable gland
Cable OD.:6 to 12 mm
Dimensions:
Detector: 378W x 174H x 265D mm
Converter: 144W x 144H x 142D mm
Material (main):
Detector: Aluminum alloy casting, modified PPE resin
Wetted parts: Modified PPE resin, glass, fluoric rubber, silicon rubber, SUS 316
Converter: Aluminum alloy casting, Polycarbonate resin
Construction: JIS C 0920, IP65 Water-tight
Finish:
Detector, converter:
Baked polyurethane resin coating (standard)
Baked epoxy resin coating (optional)
Color:
Detector: Spring Black (Munsell 3.3PB2.5/0.5 or equivalent), Mint green (Munsell 5.6BG3.3/2.9 or equivalent)
Converter: Silver Gray (Munsell 3.2PB7.4/1.2 or equivalent)
Weight:
Detector: Approx. 5.8 kg
Converter: Approx. 1.5 kg
Power supply: 100 to 240 VAC -15%/+10%, 50/60 Hz
Grounding: Class D grounding
Grounding resistance of 100Ω or less
Power consumption:
Converter + Detector: 50 VA max.

Regulatory Compliance

EMC Regulatory Arrangement in Australia and New Zealand
EN 55011 Class A, Group 1
Korea Electromagnetic Conformity Standard Class A
한국 전자파적합성 기준

Characteristics

Standard performance
(under normal operating conditions)
Repeatability: ±1% of reading or ±0.002 NTU, whichever is greater
Linearity: ±2% of reading or ±0.01 NTU, whichever is greater
Response time: Within 2 minutes (90% response, sample water flow rate 3 l/min)
Optional Specifications
Head tank:
Simple head tank
Application: Turbidity is 10 NTU or less. To remove relatively large air bubbles.
Sample water conditions: Flow rate: 1 to 10 l/min
Turbidity: 2 to 10 NTU
Pressurized head tank for low turbidity
Application: Turbidity is 2 NTU or less. To remove air bubbles and to prevent them from occurring.
Sample water conditions:
Flow rate; 0.05 to 10 l/min
Turbidity; 2 NTU or less
Pressure; 20 to 500 kPa
Transducer for ultrasonic cleaning (TUS400G Ultrasonic Oscillator should be purchased separately.)
Zero turbidity filter
When measuring range is 2.0 NTU or greater: 1 µm
When measuring range is below 2.0 NTU:
1 µm + 0.2 µm

2. TUS400G Ultrasonic Oscillator

Combination device: Turbidity converter (TB750G)
Special cable (3-conductor shielded cable)
Cleaning method: Continuous ultrasonic emission (Frequency sweep method)
Oscillation frequency: Approx. 170 to 200 kHz (sweeping frequency: Approx. 160 to 250 kHz)
Output voltage: Approx. 40 to 80 V
Power supply: 100/110/115/200/220/240 V AC ±10%, 50/60 Hz
Power consumption: Approx. 30 VA
Insulation resistance:
Power supply-G: 100 MΩ or more / 500 V DC
Output terminals-G: 100 MΩ or more / 500 V DC
Withstand voltage:
Power supply-G: 1000/1500 V AC for 1 min.
Output terminals-C: 1000/1500 V AC for 1 min.
Ambient temperature: -10 to 50°C (hood may be fitted as option)
Storage temperature: -25 to 70°C
Construction: JIS C 0920 Water-tight (NEMA 4 equivalent waterproof construction)
Material: Case: Aluminum alloy casting
Window: Polycarbonate
Finish: Baked polyurethane resin coating (standard)
Baked epoxy resin coating (optional)
Color:
Case: Frosty white (Munsell 2.5Y8.4/1.2 or equivalent)
Cover: Deep sea-moss green (Munsell 0.6G3.1/2.9 or equivalent)
Mounting: Pipe mounting, wall or rack mounting or panel mounting
Mounting material: Stainless steel
Cable inlet port: Ø22.7 hole x 2
DIN Pg16 watertight plastic gland
Cable/terminal: For 7 to 12 mm, M4 screw
Conduit adapter: Power supply side (optional)
Material: Polycarbonate resin
Connection: G1/2 or 1/2NPT
Weight:
Body: Approx. 2.0 kg
Mounting: Approx. 0.7 kg
Dimension:162W x 180H x 115D mm
Note: 1. Output of ultrasonic oscillator changes with power supply voltage. The output is lower when the voltage is lower.
2. Output of ultrasonic oscillator changes with connected cable. The output is lower when the length of the cable is longer.
Noise filter assembly: (for TUS400G-NN-RC, -KC)
Ambient temperature: -10 to 50°C
(no dew condensation allowed)
Strage temperature: -25 to 70°C
Construction: JIS C 0920 Watertight (IP53)

Regulatory Compliance

(for TUS400G-NN-RC)
EMC Regulatory Arrangement in Australia and New Zealand
EN 55011 Class A, Group 1
(for TUS400G-NN-KC)
Korea Electromagnetic Conformity Standard Class A
한국 전자파적합성 기준

■ Model and Codes

1. TB750G Right Angle Scattered Light Turbidimeter

Model	Suffix Code	Option Code	Description
TB750G	.....	.....	Right angle scattered light turbidimeter
Turbidity standard and measuring range	-NTU	.....	Formazin, 0-0.2 NTU to 0-100 NTU
Application	-ST	.....	Standard
Output	-N1	.....	4 to 20 mA DC, RS-422
	-N2	.....	4 to 20 mA DC, RS-232C
Sampling system	-NN	.....	Without sampling system
Sampling system material and mounting	NN	.....	Without sampling system
Cable length between converter and detector	-1	.....	1 m
	-2	.....	2 m
	-3	.....	3 m
——	-NN	.....	Always -NN
Option	Detector process connection	/NPT	ANSI standard connection *1
	Mounting hardware	/U	Pipe mounting hardware (SUS)
		/R	Rack or wall mounting hardware (SUS)
		/PM	Panel mounting hardware (SUS)
		/TBC	Mounting hardware for Model 8562 or Model TB500G replacement (SUS) *2
	Conduit adapter	/AFTG	G1/2 *3
		/ANSI	1/2NPT *3
	Head tank	/D1	Pressurized head tank for low turbidity (recommended for 2.0 NTU or less)
		/D2	Simple head tank
	Tag plate	/SCT	Stainless steel tag plate
	Special painting	/X1	Epoxy painting *4
	Ultrasonic transducer	/US	Transducer for ultrasonic cleaning *5

*1: When option "/NPT" is specified, the piping connections of sample water inlet, sample water outlet, and drain port are 1/2NPT, 1/2NPT, and 1NPT respectively. Unless option "/NPT" is specified, they are Rc1/2, Rc1/2, and Rc1 respectively.
*2: This bracket is also available to the detector of Turbidimeter 1720E and 1720D manufactured by HACH. It is separate type, each for detector and converter.
*3: Conduit adapter is for power supply, output and input wiring provided by customer.
*4: Converter and detector case are painted with epoxy resin.
*5: Specify option "/US" (ultrasonic transducer) for ultrasonic cleaning. Also TUS400G Ultrasonic Oscillator should be purchased separately.
Note: When ultrasonic cleaning is continuously used after the Model 8562 Turbidity Transmitter has been replaced with the TB750G Turbidimeter, this "/US" option must be specified.

2. TUS400G Ultrasonic Oscillator

Model	Suffix Code	Option Code	Description
TUS400G	.....	.....	Ultrasonic oscillator for turbidimeter
——	-NN	.....	Always –NN
Application	-NN	.....	General
	-RC	.....	Australia, for Oceania areas
	-KC	.....	For Korea
Supply voltage *2	-1	.....	100 V AC, 50/60 Hz
	-2	.....	110 V AC, 50/60 Hz
	-3	.....	115 V AC, 50/60 Hz
	-4	.....	200 V AC, 50/60 Hz
	-5	.....	220 V AC, 50/60 Hz
	-6	.....	240 V AC, 50/60 Hz
Ultrasonic vibrator connecting cable	-00	.....	None
	-L1	.....	1 m (for Model TB700G or TB750G)
	-L2	.....	5 m (for Model TB700G or TB750G)
	-L3	.....	10 m (for Model TB700G or TB750G)
	-L4	.....	15 m (for Model TB700G or TB750G)
	-05	.....	5 m (for Model 8562)
	-10	.....	10 m (for Model 8562)
	-15	.....	15 m (for Model 8562)
Language for directions	-J	.....	Japanese (Directions indicated on product: Some are written both in Japanese and in English.)
	-E	.....	English (Directions indicated on product: Some are written both in Japanese and in English.)
Option	Mounting hardware	/PS	Pipe mounting (SUS)
		/W	Wall mounting (SUS)
	Hood	/PA	Panel mounting (SUS)
	Tag plate	/H	Sunshade hood
	Special painting	/SCT	Stainless steel tag plate
	Adapter for conduit work	/X1	Epoxy painting
		/AFTG	G1/2
	Special screws	/ANSI	1/2NPT
		/SPS	Teflon coated SUS steel screws (resistant to salt corrosion) *1

*1:The SUS screws with Teflon coating are used at the four corners of the cover.
*2:The power supply to TB700G or TB750G should be determined in accordance with the supply voltage specified here.

3. Zero Turbidity Filter Assembly

Part Name	Part No.
Filter Assembly, 1 µm	K9411UA
Filter Assembly, 0.2 µm	K9726EF

4. Consumables

Part Name	Part No.
Filter Element, 1 µm	K9008ZD
Filter Element, 0.2 µm	K9726EH
Lamp Assembly	K9657PW
Fuse (3.15 A)	A1113EF
Desiccant (4 pcs) *1	K9657RJ

*1: Use within a year after purchasing.

5. Head Tank

Part Name	Part No.	Description
Pressurized head tank	K9725WA	Same as option code /D1
Simple head tank	K9658YA	Same as option code /D2

■ Dimensions

1. TB750G Right Angle Scattered Light Turbidimeter

- **Converter**

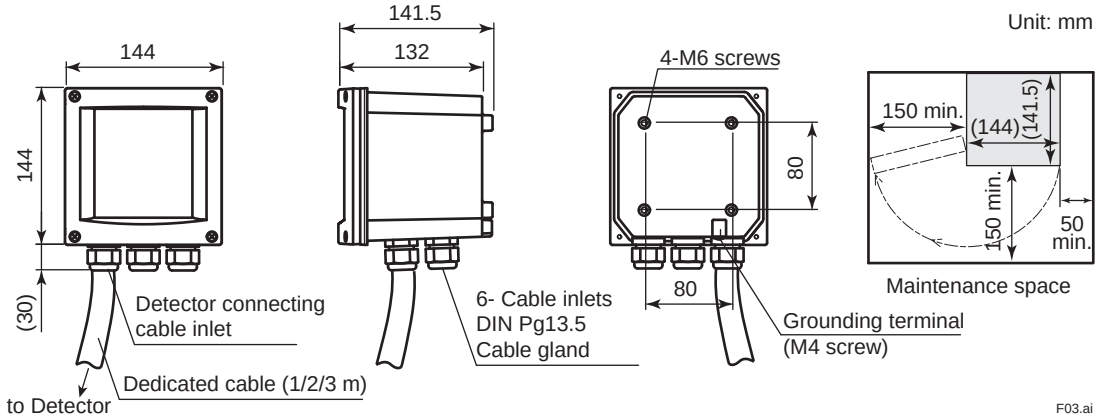

- **Detector**

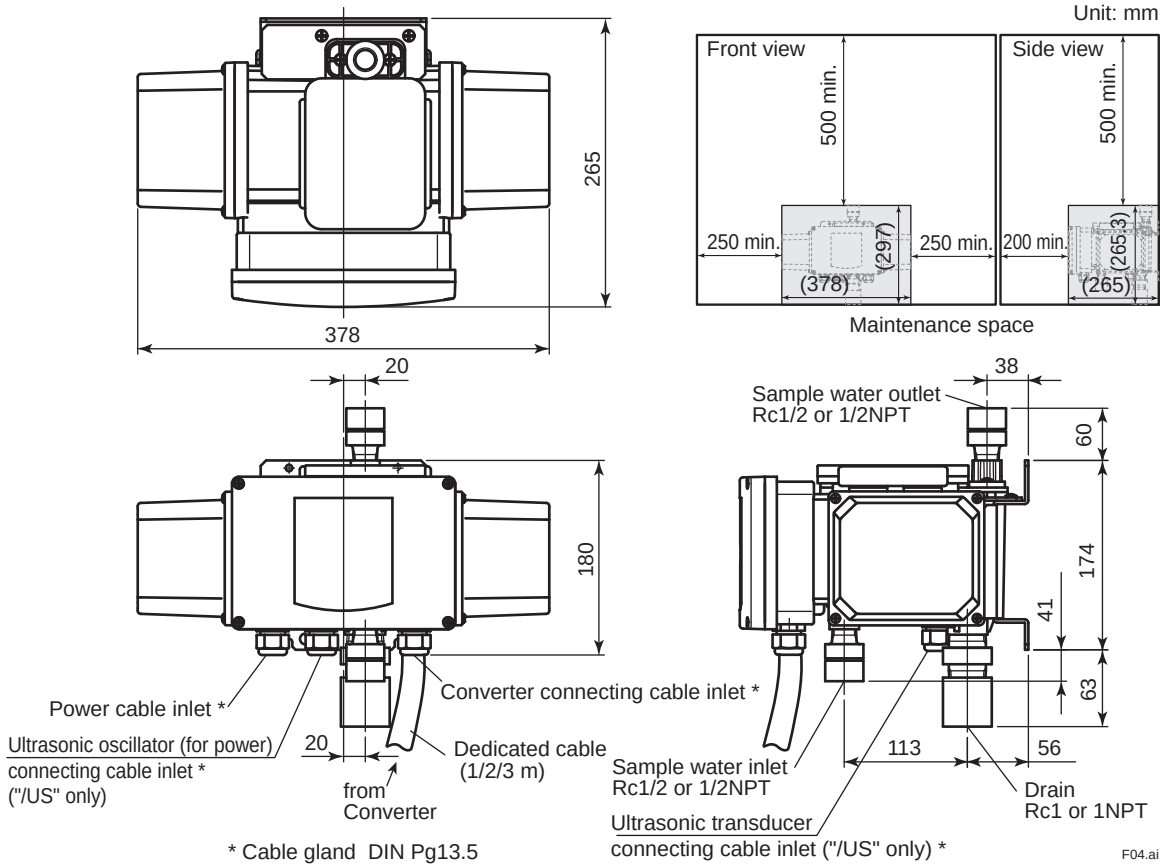

- **Conduit adapter (option code: /AFTG, /ANSI)**

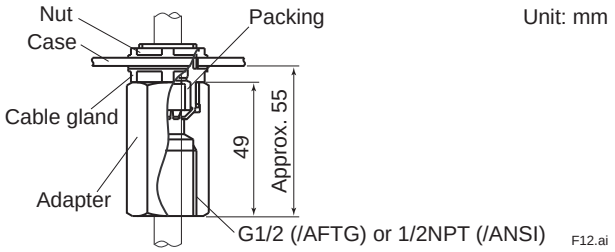

- **Pipe mounting (option code: /U)**
  Converter

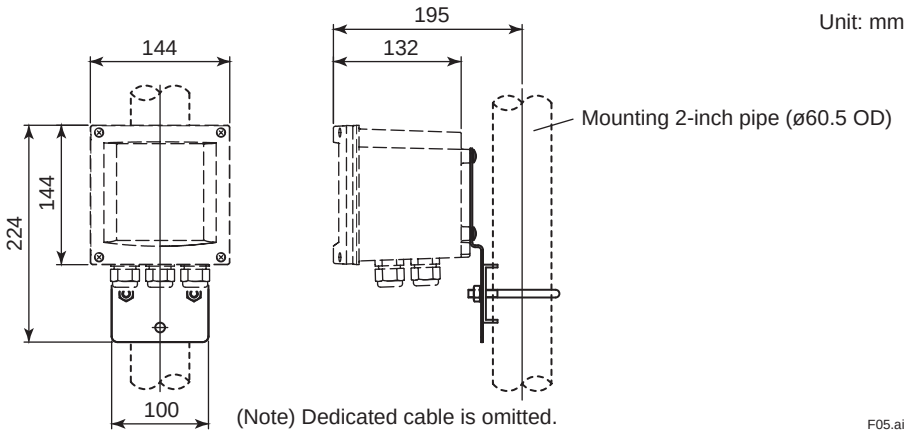

Detector

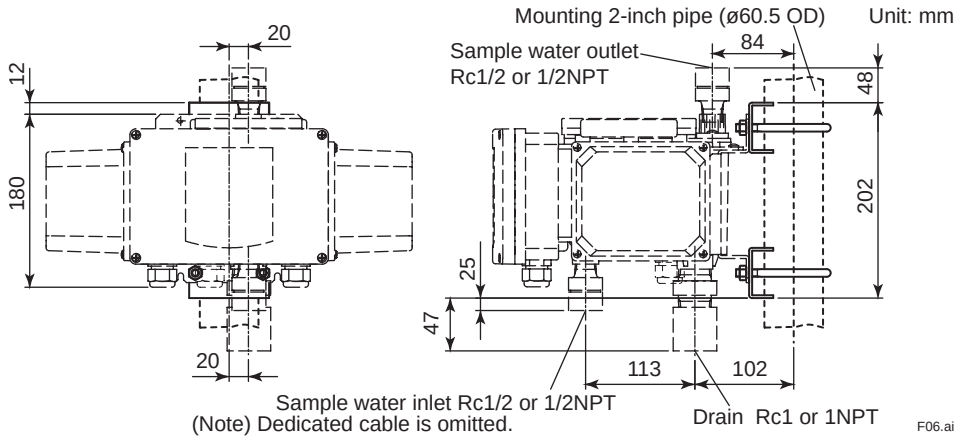

- **Rack or wall mounting (option code: /R)**
  Converter

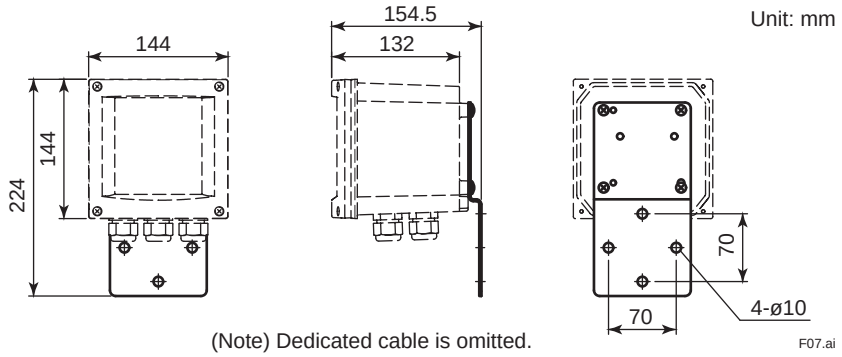

Detector (The dedicated mounting bracket is not attached. Install the detector with four M5 screws.)

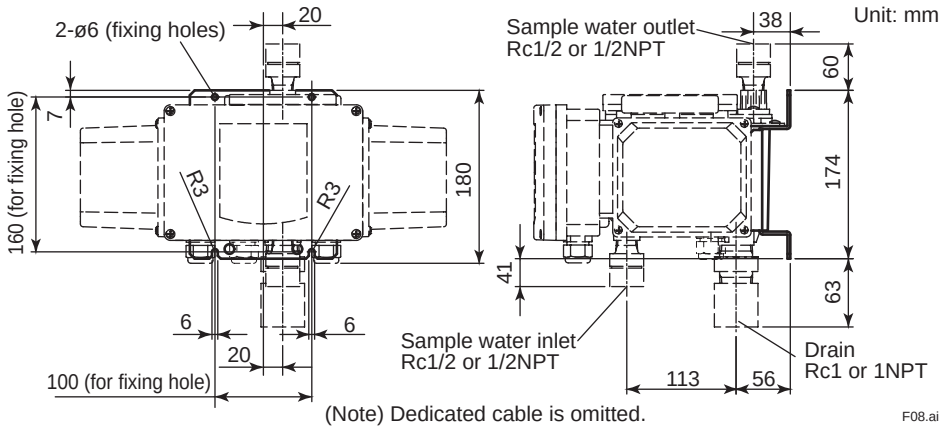

- **Panel mounting (option code: /PM)**

Converter

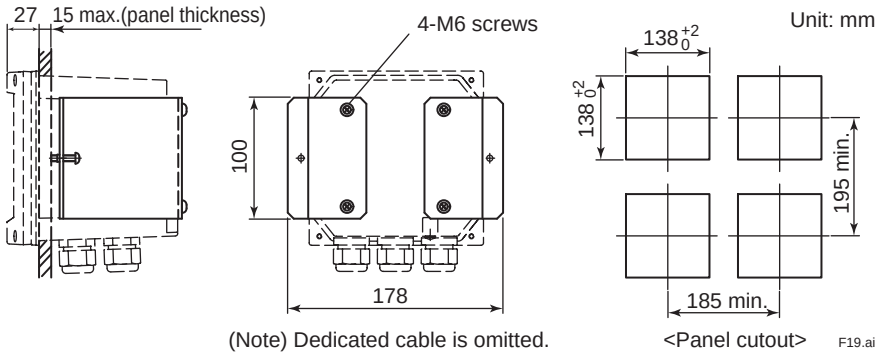

Detector (The dedicated mounting bracket is not attached. Install the detector with four M5 screws.)

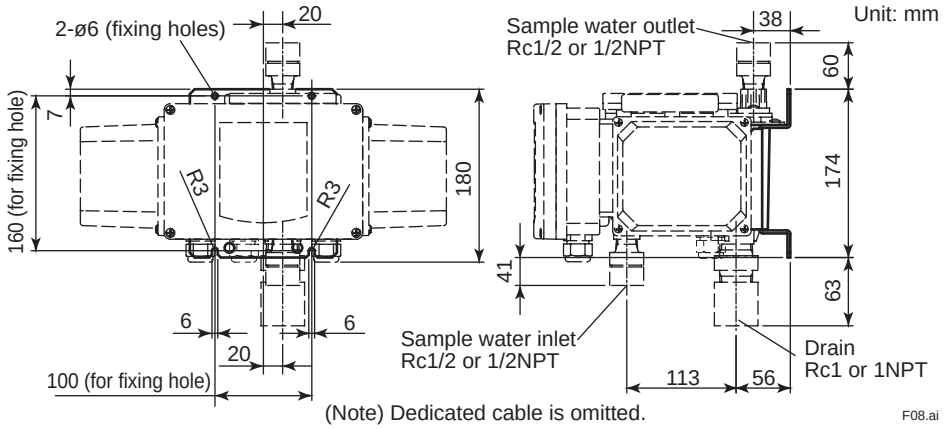

- **Mounting for Model 8562 or Model TB500G replacement (option code: /TBC)**

Converter

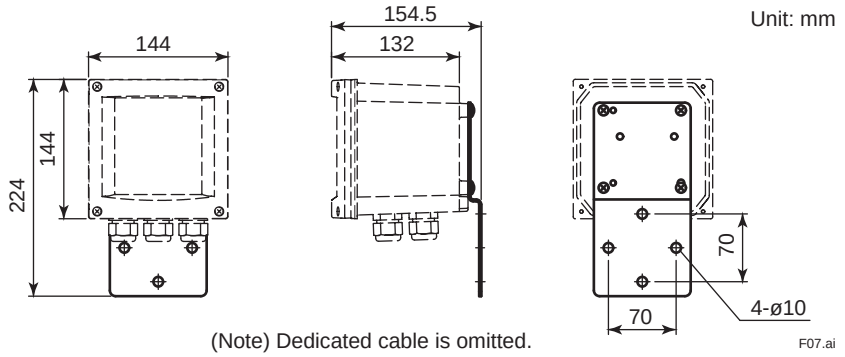

(Note) Dedicated cable is omitted.

Detector

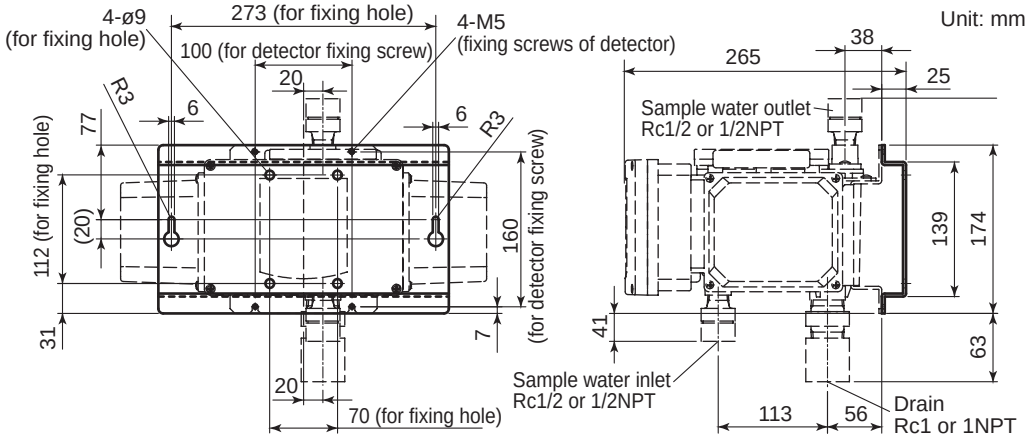

(Note) Dedicated cable is omitted.

- **Pressurized head tank for low turbidity (option code: /D1)**

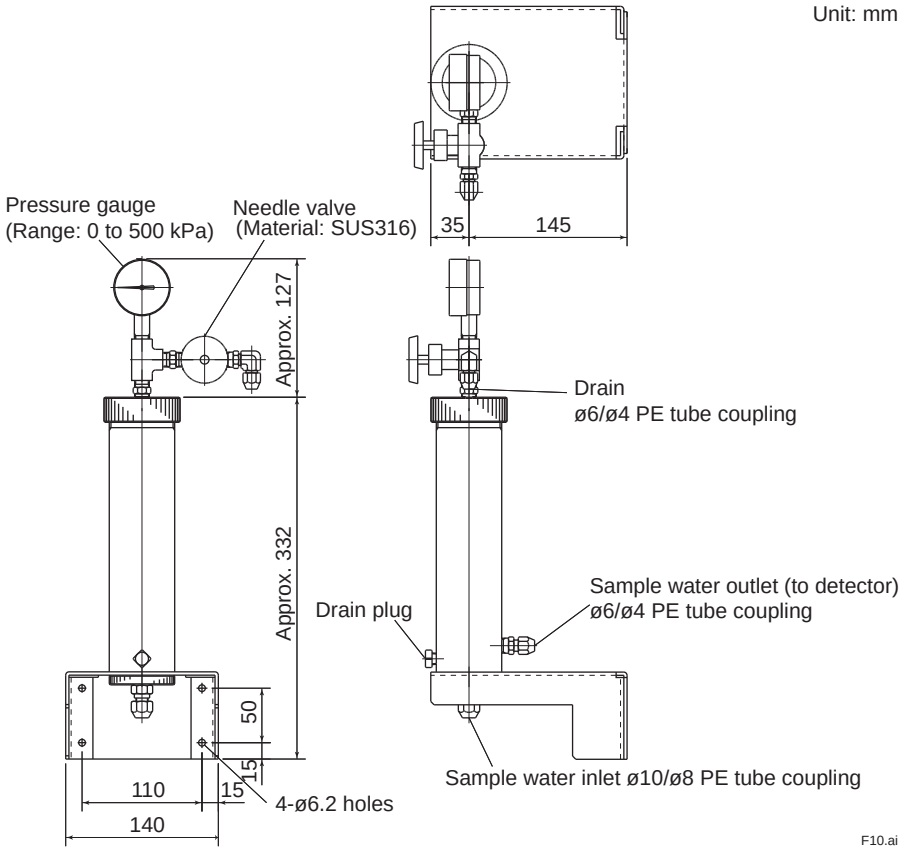

- **Simple head tank (option code: /D2)**

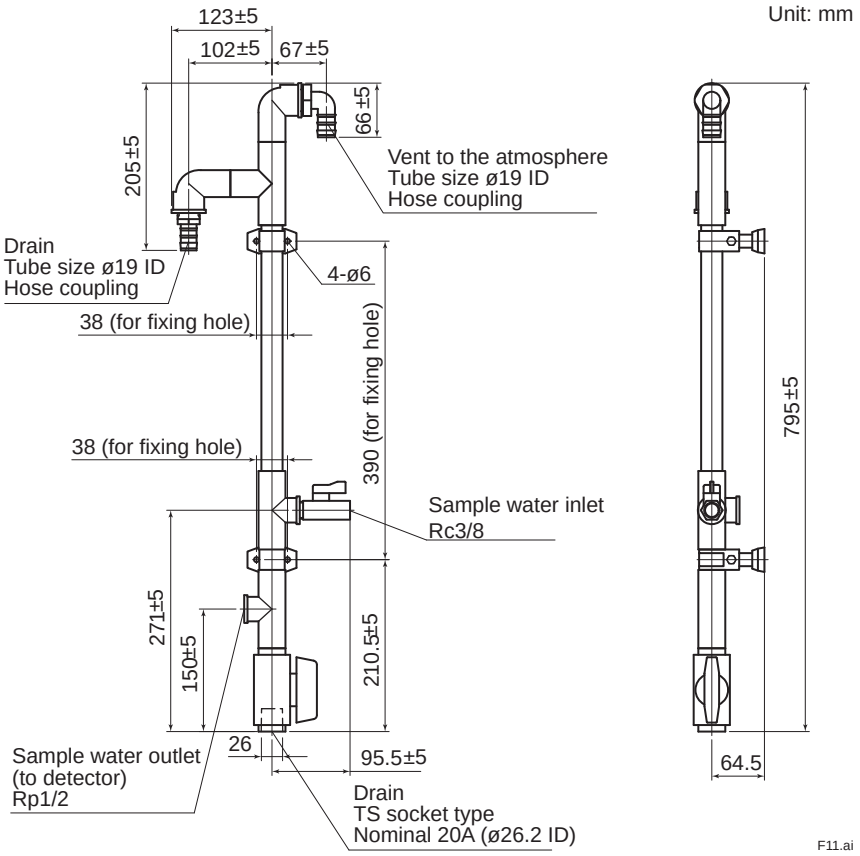

2. TUS400G Ultrasonic Oscillator

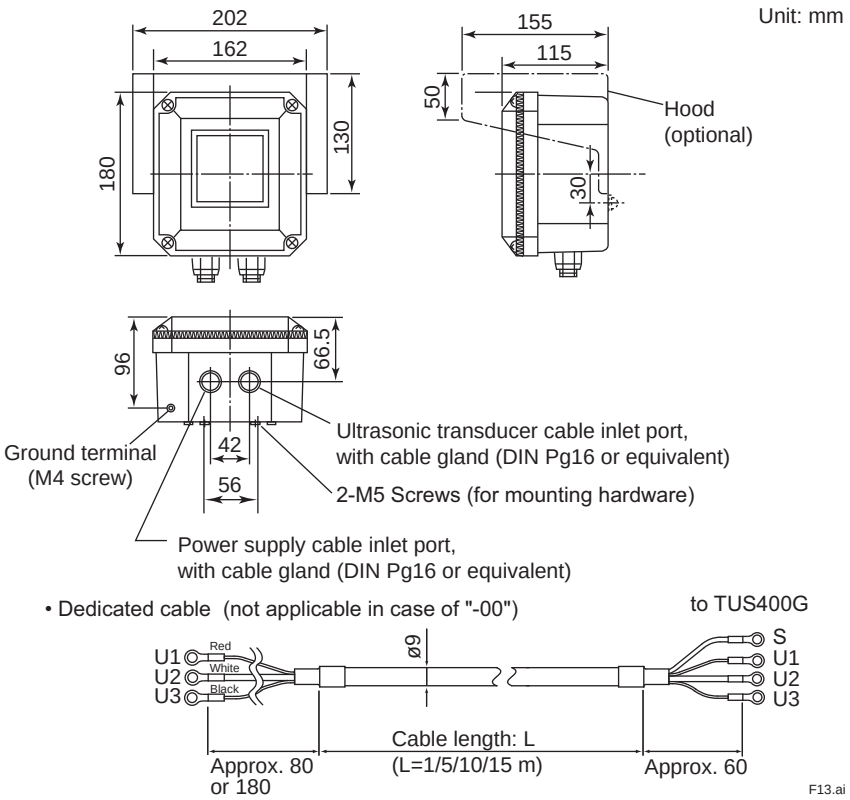

● **External dimensions of additional noise filter assembly when TUS400G-NN-RC or TUS400G-NN-KC**

Unit: mm

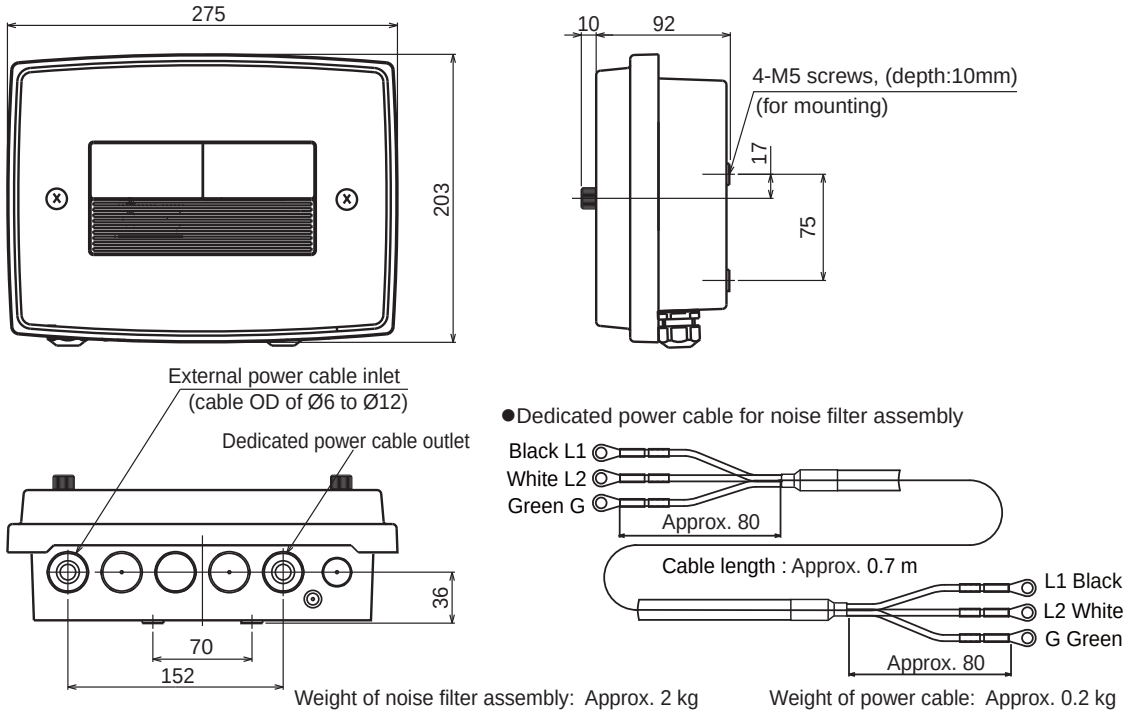

- **Pipe mounting (option code: /PS)**

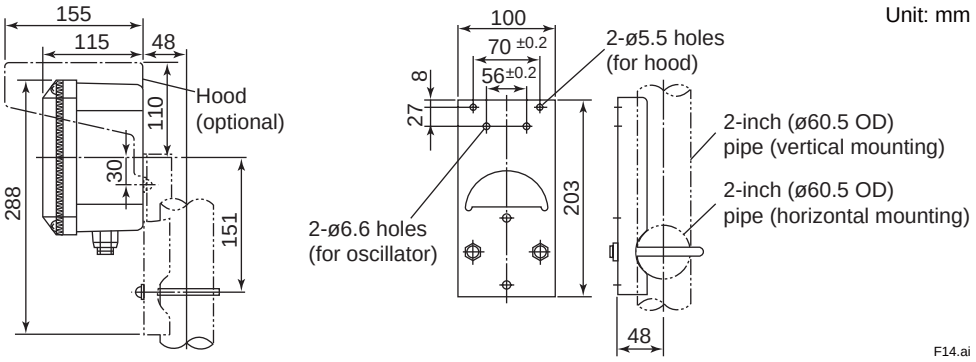

Pipe mounting for noize filter assembly
(TUS400G-NN-RC..../PS,
TUS400G-NN-KC..../PS)

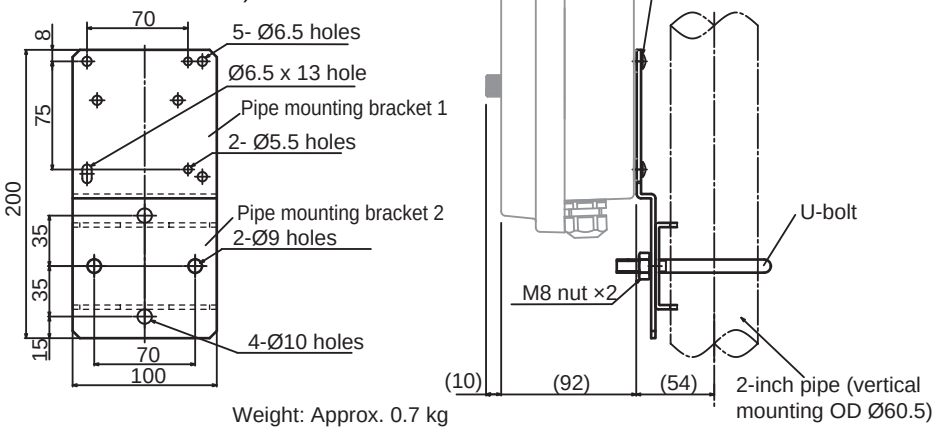

Weight: Approx. 0.7 kg

- **Panel mounting (option code: /PA)**

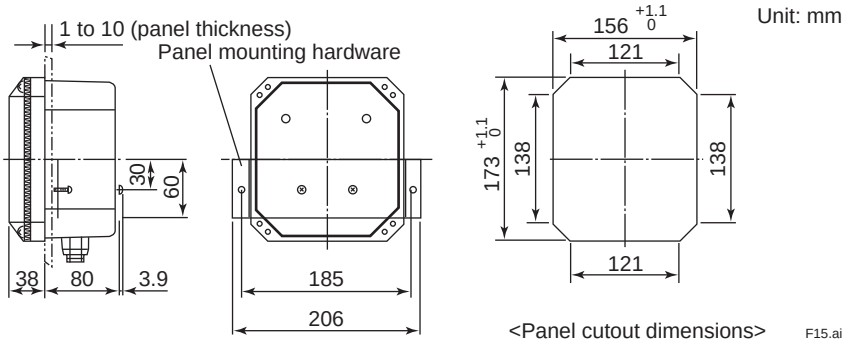

- **Wall mounting (option code: /W)**

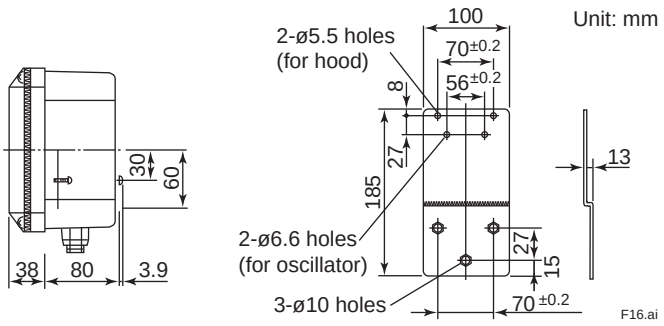

Wall mounting for noize filter assembly
(TUS400G-NN-RC..../W,
TUS400G-NN-KC..../W)

Unit: mm

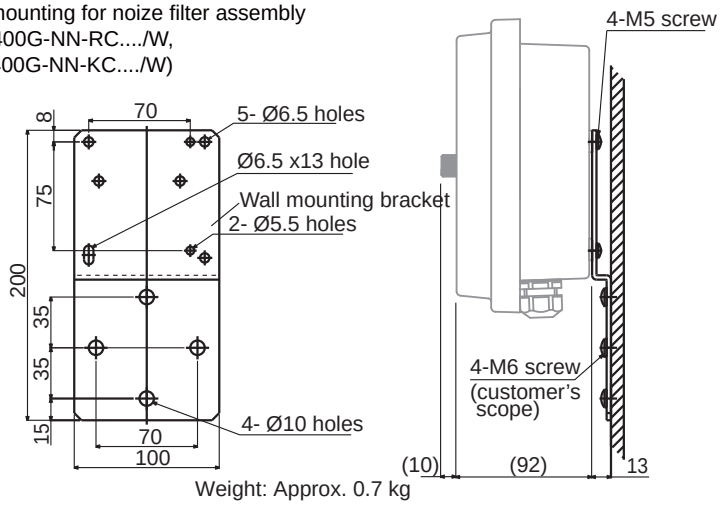

Weight: Approx. 0.7 kg

- **Adapter for conduit work (option code: /AFTG, /ANSI)**

Unit: mm

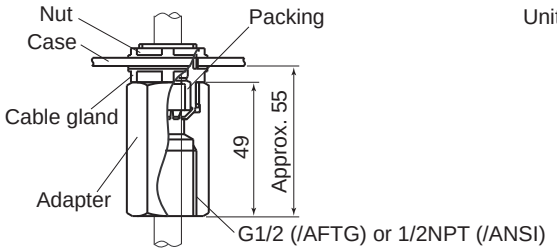

F12.ai

3. Zero Turbidity Filter Assembly

Unit: mm

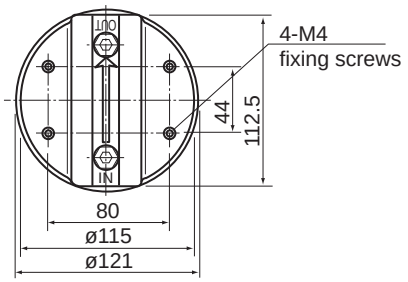

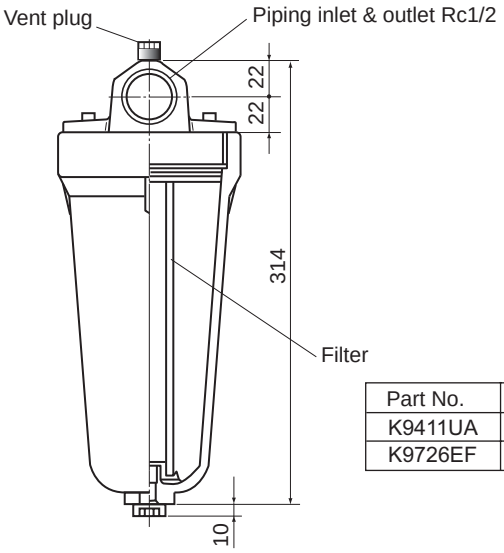

Part No.	Filtering size
K9411UA	1 µm
K9726EF	0.2 µm

F17.ai

■ Wiring

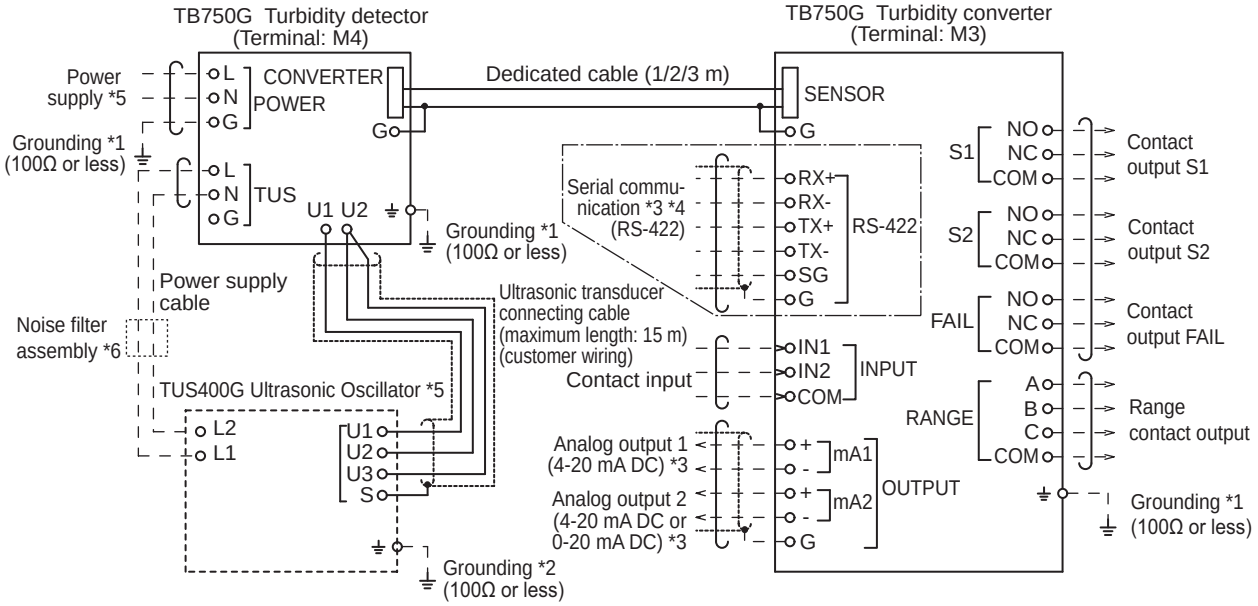

(Note) Dotted wiring is external wiring. Use cable with 6 to 12 mm OD for wiring.

*1 Power terminal "G" on detector, detector case, and converter case must be grounded (ground resistance: 100Ω or less).

*2 External grounding terminal of ultrasonic oscillator must be grounded (ground resistance: 100Ω or less).

*3 Use 2-conductor shielded cable for analog output wiring and serial communication wiring.

*4 The wiring configuration is described below in case that RS-232C serial communication is selected.

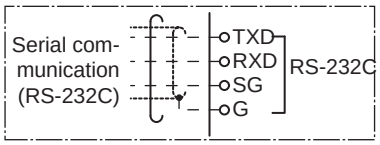

*5 When option code "/US" is specified, TUS400G should be purchased separately.
When TUS400G is used in system, the power supply to TB750G should be the same as the supply voltage specified in the MS Code of TUS400G.

*6 For TUS400G-NN-RC, TUS400G-NN-KC.

F18.ai

Enquiry Specifications Sheet for Model TB750G Right Angle Scattered Light Turbidimeter

For enquires on the Yokogawa sampling system, please tick (✓) the appropriate box ☐ and write down the relevant information in the blanks.

1. General Information

Company name; _____

Contact Person; _____ Department; _____

Plant name; _____

Measurement location; _____

Purpose of use; ☐ Indication, ☐ Recording, ☐ Alarm, ☐ Control

Power supply; _____ V AC, _____ Hz

2. Measurement Conditions

(1) Sample water temperature; _____ to _____, Normally _____ [°C]

(2) Sample water pressure; _____ to _____, Normally _____ [kPa]

(3) Sample water flow rate; _____ to _____ [l/min]

(4) Slurry or contaminations; ☐ No, ☐ Yes _____

(5) Components of sample water; _____

(6) Others; _____

3. Installation Site

(1) Ambient temperature; approx. _____ [°C]

(2) Location; ☐ Indoors_____

(3) Others; _____

4. Requirements

(1) Measuring range; _____ to _____ NTU

(2) System configuration selection; ☐ Pressurized head tank for low turbidity measurement (recommended if turbidity is 2.0 NTU or less.),

☐ Simple head tank, ☐ TUS400G Ultrasonic Oscillator

☐ Zero turbidity filter(1 μm), ☐ Zero turbidity filter (0.2 μm)

(3) Cable length between converter and detector: ☐ 1 m, ☐ 2 m, ☐ 3 m

(4) Others; _____